TTV LUGGED VALVE

# 50L3040V0

## Lugged Butterfly Valve · DN250-400

**Ref. L25040050304 0V0**

Carbon Steel ASTM body, Stainless Steel disc and FKM VITON seat. Supplied with a bare shaft and top flange for a gearbox or actuator.

- Face to face EN 558 Series 20
- Pressure tested to EN 12266-1, ISO 5208
- Tightness ISO 5208, zero leakage API 598
- ISO 5752 Connection F10 / F14
- Mounts between PN10/16 flanges

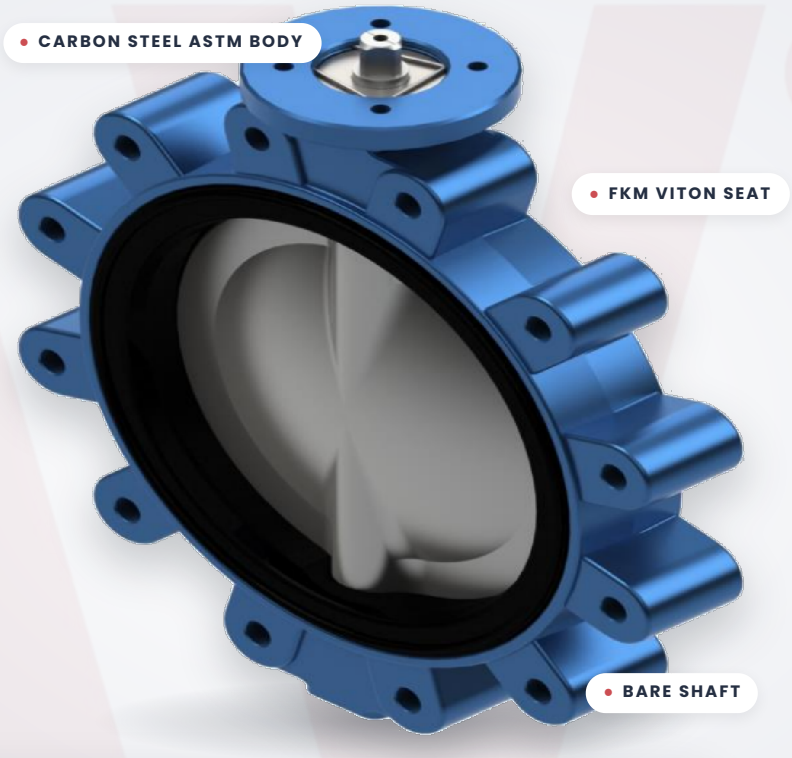


| 250-400 mm | PN10-16 · ANSI 150 | -5...+180 °C | FKM VITON |
|---|---|---|---|
| NOMINAL SIZE (DN) | PRESSURE RATING | TEMPERATURE RANGE | SEAT MATERIAL |

## Construction.

MATERIALS OF CONSTRUCTION

| BODY | SHAFT | DISC | SEAT |
|---|---|---|---|
| **Carbon Steel ASTM** | **Stainless Steel** | **Stainless Steel** | **FKM VITON** |
| A216 Grade WCB | ASTM A182 F304 | ASTM A351 CF 8M | |

**MOUNTING BETWEEN FLANGES**
PN10/16 · ISO 7005, DIN 2501, EN 1092-1 · ANSI class 150: ANSI B16.5

**FACE TO FACE**
EN 558 Series 20 · ISO 5752 Series 20 · API 609 Table 1 · BS 5155 Series 4

**PRESSURE TEST**
EN 12266-1, ISO 5208: Body: 1.5×PN · Seat: 1.1×PN

**TIGHTNESS TEST**
ISO 5208, zero leakage API 598

**TEMPERATURE**
-5°C up to +180°C

TECHNICAL DATA

# Dimensions & standards.

Lug DN250-400 | PN10-16 & ANSI 150
Valve with bare shaft

Model shown on source sheet: 50L3040 FKM VITON. Source: TTV datasheet ref. L250400503040V0, revision 0 (2-1-2020).

DIMENSIONAL DRAWING

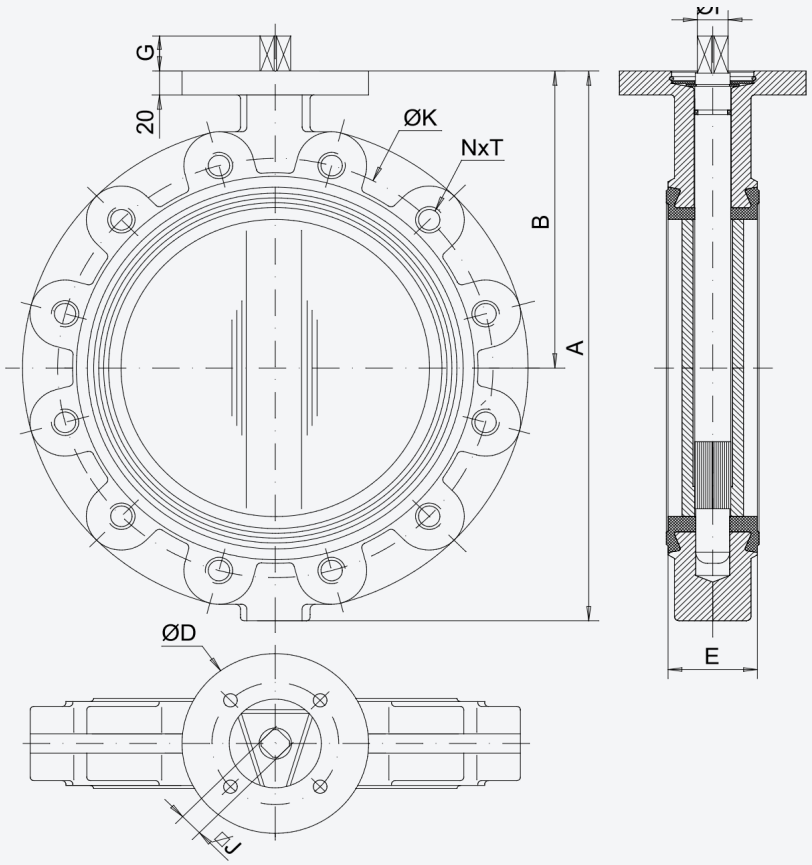


## STANDARDS & RATINGS

**Temperature**
-5°C up to +180°C

**Tolerances**
ISO 2768-M

**Face to Face**
EN 558 Series 20
ISO 5752 Series 20
API 609 Table 1
BS 5155 Series 4

**Pressure test according to**
EN 12266-1, ISO 5208:
Body: 1.5×PN
Seat: 1.1×PN

**Mounting between flanges**
PN10/16
ISO 7005, DIN 2501, EN 1092-1
ANSI class 150: ANSI B16.5

**Tightness test**
ISO 5208, zero leakage API 598

## Dimensions.

50L3040V0 · DN250-400

| DN | | A | B | D | E | F | G | J | PN10 | | PN16 | | ANSI150 | | ISO 5752 Connection | Weight Kg |
|---|---|---|---|---|---|---|---|---|---|---|---|---|---|---|---|---|
| mm | inch | | | | | | | | K | N°×T1 | K | N°×T1 | K | N°×T1 | | |
| 250 | 10" | 460 | 248 | 150 | 68 | 25 | 24 | 19 | 350 | 12×M20 | 355 | 12×M24 | 362 | 12×7/8" | F10 | 28,5 |
| 300 | 12" | 523 | 280 | 150 | 78 | 28 | 24 | 22 | 400 | 12×M20 | 410 | 12×M24 | 431.8 | 12×7/8" | F10 | 42 |
| 350 | 14" | 570 | 300 | 170 | 78 | 28 | 29 | 22 | 460 | 16×M20 | 470 | 16×M24 | 476.3 | 12×1" | F14 | 53 |
| 400 | 16" | 644 | 340 | 170 | 102 | 35 | 29 | 27 | 515 | 16×M24 | 525 | 16×M27 | 539.8 | 16×1" | F14 | 77 |

(Note) dimensions and standards may vary without announcement. Colours are orientative.

Data supplied by TTV and provided for reference only. Specifications may change without notice – please confirm details with Actuation Valve & Control before ordering.

**Need this valve automated?**
Talk to our UK team about gearboxes, actuators and complete actuated valve packages.
actuation.co.uk